Genie® GTH™-1544

Specifications

Models	GTH-1544	
Measurements	**US**	**METRIC**
Maximum lift height	44 ft 7 in	13.59 m
Maximum forward reach	30 ft 7 in	9.33 m
Reach at maximum height	4 ft 6 in	1.37 m
A Height, stowed	8 ft 8 in	2.63 m
B Length, stowed (without forks)	22 ft 8 in	6.91 m
Width	8 ft 6 in	2.59 m
C Wheelbase	11 ft 6 in	3.51 m
D Ground clearance, center	1 ft 3 in	0.38 m
E Ground clearance, axle	1 ft 6 in	0.46 m
Fork cross section	2×5 in	51×127 mm
Productivity		
Maximum lift capacity	15,000 lb	6,804 kg
Lift capacity at maximum height	10,000 lb	4,536 kg
Lift capacity at maximum reach	5,000 lb	2,268 kg
Drive speed	17 mph	27.4 km/h
Boom up/down	15/14 sec	
Boom extend/retract	21/25 sec	
Draw bar pull	25,000 lb (121hp PS)	11,340 kg (121hp PS)
Frame leveling (side to side)	10°	
Turning radius, outside (4WS)	13 ft 11 in	4.24 m
Auxiliary hydraulic flow	2-15 gpm	7.6-56.8 lpm
Auxiliary hydraulic pressure	3,200 psi	220 bar
Tires, standard size	14×28 in	0.35×0.71 m
Power		
Power source	Deutz TCD 3.6 L4	
Electrical system voltage	12V	
Alternator	95 amp	
Battery	1000 CCA 0°F	1000 CCA -18°C
Hydraulic tank capacity	27 gal	102.2 L
Hydraulic system capacity (w/tank)	52 gal	196.8 L
Fuel tank capacity	30 gal	113.6 L
Weight		
Weight*	32,810 lb	14,882 kg

Range of motion GTH-1544 without stabilizers

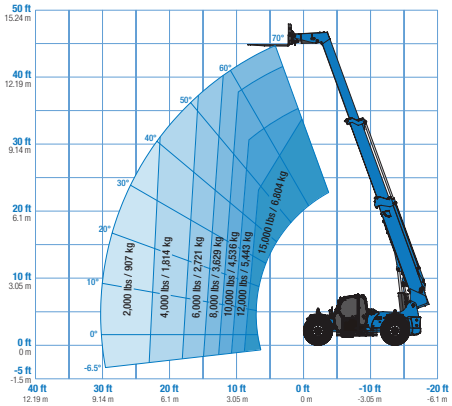

Range of motion GTH-1544 with stabilizers down

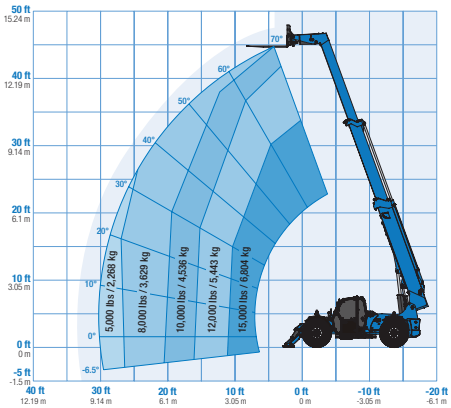

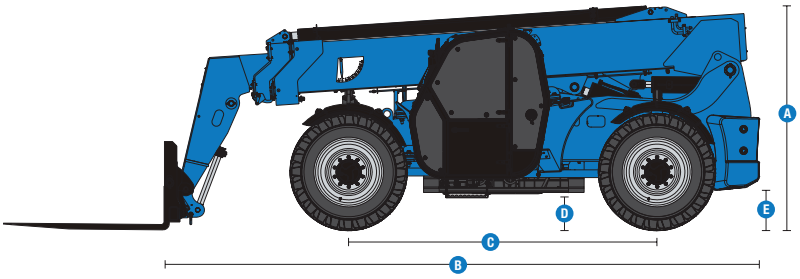

(1) Weight will vary depending on options and/or country standards.
(2) Load ratings vary depending on attachment.

Genie® GTH™-1544

EOC: Easy Order Configurations

- **GTH1544 EOC 1.0:** Cab with A/C, 121hp Deutz T4f, Worklights, Std Battery & Beacon
- **GTH1544 EOC 2.0:** Cab with A/C, 121hp Deutz T4f, Roadlights, Fenders, Std Battery & Beacon
- **GTH1544 EOC 3.0:** Canopy, 121hp Deutz T4f, Worklights, Std Battery & Beacon
- **GTH1544 EOC 4.0:** Canopy, 121hp Deutz T4f, Roadlights, Fenders, Std Battery & Beacon

	Option availability	EO	FtO	BtO
Cab	Open Cab ROPS/FOPS Canopy	✔	✔	✔
	Closed cab: AC, heater, defrost, wipers, washer, split door	✔	✔	✔
	Backup alarm	✔	✔	✔
	Front and top glass		✔	✔
	Rear Proximity Alarm		✔	✔
	Rear proximity alarm with back-up camera and display		✔	✔
	3in/7.6cm high visibility red retractable seat belt	✔	✔	✔
	Adjustable suspended seat	✔	✔	✔
	Full gauge cluster with engine diagnostics	✔	✔	✔
	Fully proportional hydraulic boom controls	✔	✔	✔
	Load Moment Indicator			✔
	Machine level indicator	✔	✔	✔
	Mirrors - LH canopy mounted and RH chassis mounted	✔	✔	✔
	Multi-function joystick controller	✔	✔	✔
Chassis	121 hp, Deutz TCD 3.6, T4f, Side-mounted engine	✔	✔	✔
	Telematics-ready	✔	✔	✔
	Flashing beacon	✔	✔	✔
	Work lights: High output LED cab, boom, rear	✔	✔	✔
	Road and work lights: High output LED front, cab, boom, rear	✔	✔	✔
	Fenders set of four	✔	✔	✔
	Electric block heater		✔	✔
	Lift Connect Telematics		✔	✔
	Lift Connect with Access Manager upgrade		✔	✔
	Stabilizers, twin front mounted			✔
	Foam-filled Enduro A/T tires	✔	✔	✔
	Solid rough terrain tires		✔	✔
	3-mode power steering (2-wheel, 4-wheel coordinated and crab)	✔	✔	✔
	Frame leveling +/- 10 degrees	✔	✔	✔
	Full time 4WD with front and rear limited slip differential (LSD)	✔	✔	✔
	Internal multiple wet disc brakes	✔	✔	✔
	No stabilizers	✔	✔	✔
	Powershift transmission (PS) 4-speed 121 hp	✔	✔	✔
	Rear axle stabilizing system	✔	✔	✔
	Spring applied, hydraulic release parking brake	✔	✔	✔
	Tilt steering wheel	✔	✔	✔
Boom	Genie manual Quick-Attach (QA) system	✔	✔	✔
	Auxiliary hydraulic circuit (15 GPM)	✔	✔	✔
	Boom angle indicator	✔	✔	✔
	Lifting shackle at boom tip	✔	✔	✔
	Self-leveling fork frame	✔	✔	✔

- EO — Easy Order
- FtO — Finish to Order
- BtO — Build to Order

Side Mounted Engine

Lift Shackle

Optional Stabilizers

GTH Attachments

- QA Bucket 1.5yd³/1.15m³, 96in/2.44m
- QA Carriage 48in/1.2m, 60in/1.5m, 72in/1.8m
- QA Fork positioner carriage 48in/1.2m
- QA Side shift carriage 48in/1.2m
- QA Rotate carriage 48in/1.2m, 60in/1.5m, 72in/1.8m
- QA Truss boom, adjustable, 8ft/2.44m to 13ft/4m
- Pallet forks 48in (2×5×48in)/(.05×.13×1.2m) × 2
- Pallet forks 60in (2×5×60in)/(.05×.13×1.5m) × 2
- Pallet forks 72in (2×5×72in)/(.05×.13×1.8m) × 2
- Pallet forks 96in (2×5×96in)/(.05×.13×2.4m) × 2

Product specifications are subject to change without notice or obligation. Photographs and/or drawings herein are for illustrative purposes only. Refer to the appropriate Operator's Manual for instructions on proper equipment use. Failure to follow instructions in the Operator's Manual may result in serious injury or death. The only warranty applicable to our equipment is the standard written warranty applicable to the particular product and sale and we make no other warranty, express or implied. Products and services listed may be trademarks, service marks or trade names of Terex Corporation and/or their subsidiaries in the USA and many other countries. Terex, Genie, Quality By Design, Xtra Capacity, Lift Power, Lift Guard, Lift Tools, Lift Connect and Tech Pro Link are registered trademarks of Terex Corporation or its subsidiaries.

08/26

© 2026 Terex Corporation